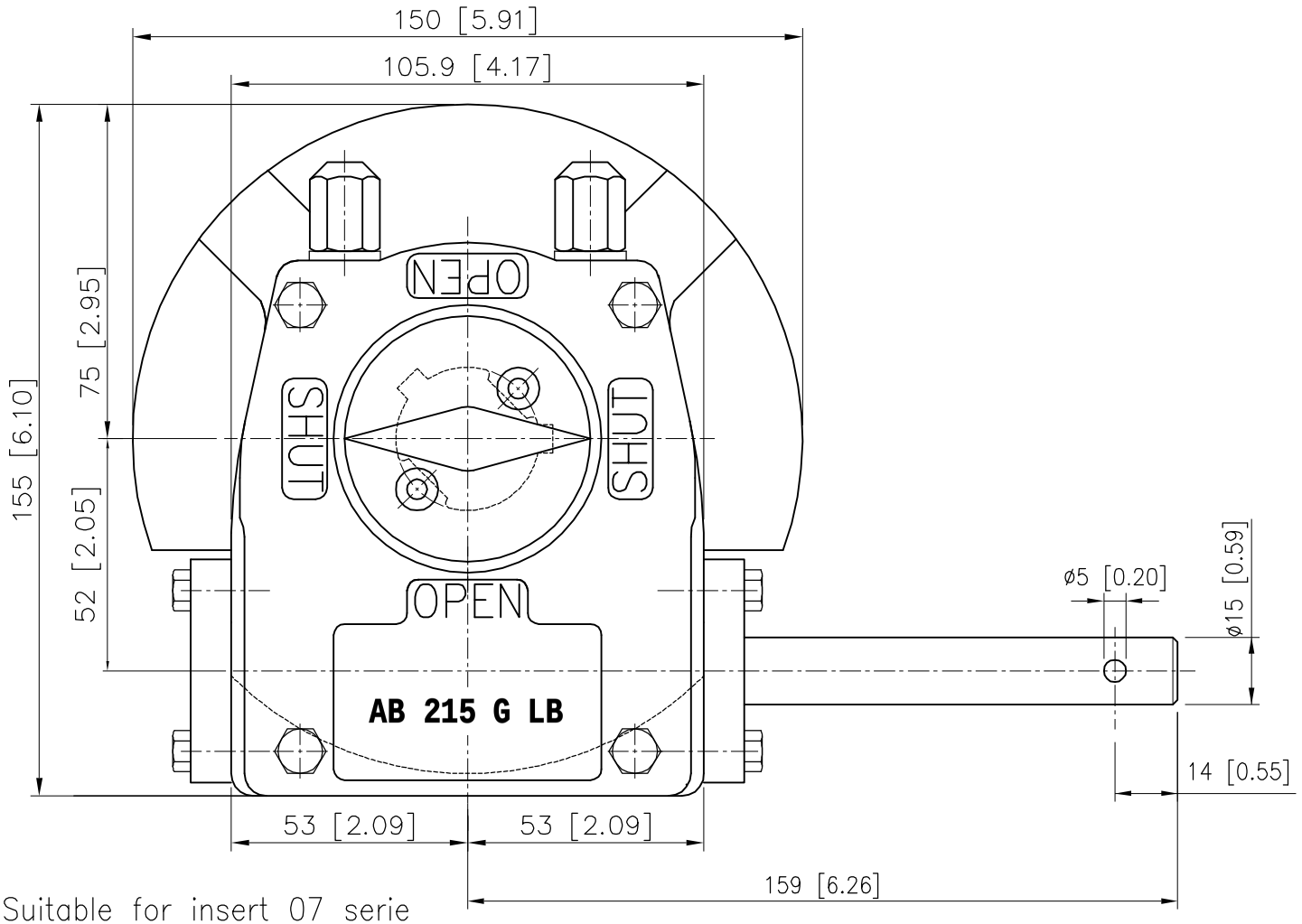

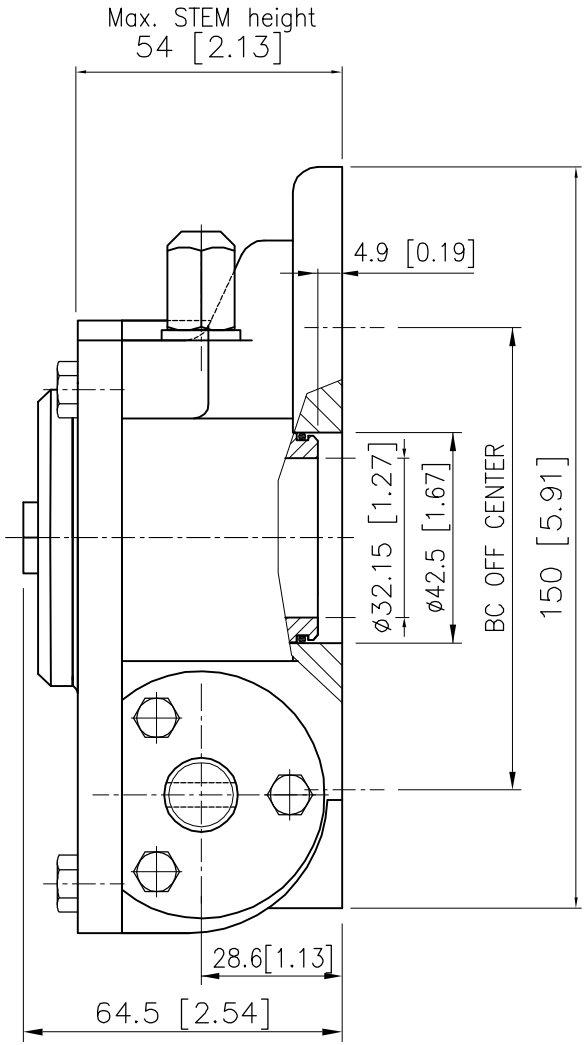

Suitable for insert 07 serie

DESCRIPTION

TRAVEL : −5° to 95° adjustable
RATIO : 37 : 1
TURNS TO CLOSE : 9.25
WEIGHT : 5.5kg. (12.1 Lb.) excl.handwheel

MOUNTINGHOLES

BOLT CIRCLE : min. ø50 [1.97]
(OFF CENTER) max. ø125 [4.92]
acc. ISO 5211 : F05−F07−F10−F12
BORE : min.8.4[0.33] max.ø20[0.79] #17[0.67]

TORQUE

max.OUTPUT : 500 Nm (4425 lbf.in.)
max.INPUT : 43 Nm (381 lbf.in.)
M.A. : 11.6 ±15%

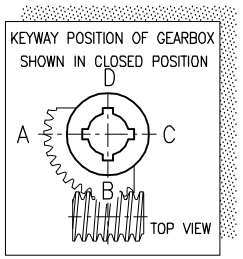

Dimensions in MM [inch]

rotork gears
Nijverheidstraat 25
7581 PV Losser
The Netherlands

GEARBOX AB 215 G LB

THIS DOCUMENT IS PROPERTY OF ROTORK GEARS, NEITHER THIS OR ITS CONTENT MAY BE COPIED OR USED IN ANY OTHER WAY DETRIMETAL TO THE INTEREST OF ROTORK GEARS, ACCEPTANCE OF THIS DOCUMENT SHALL CONSTITUTE ACKNOWLEDGEMENT OF THE FOREGOING CONDITIONS

Drawn : S.B. Date : 05-11-2009
Dwg Nr.: D02GILB-011 Rev.: 01

Contents Subject to change without notice.