CIRCUIT DRAWN WITH
POWER SUPPLY OFF

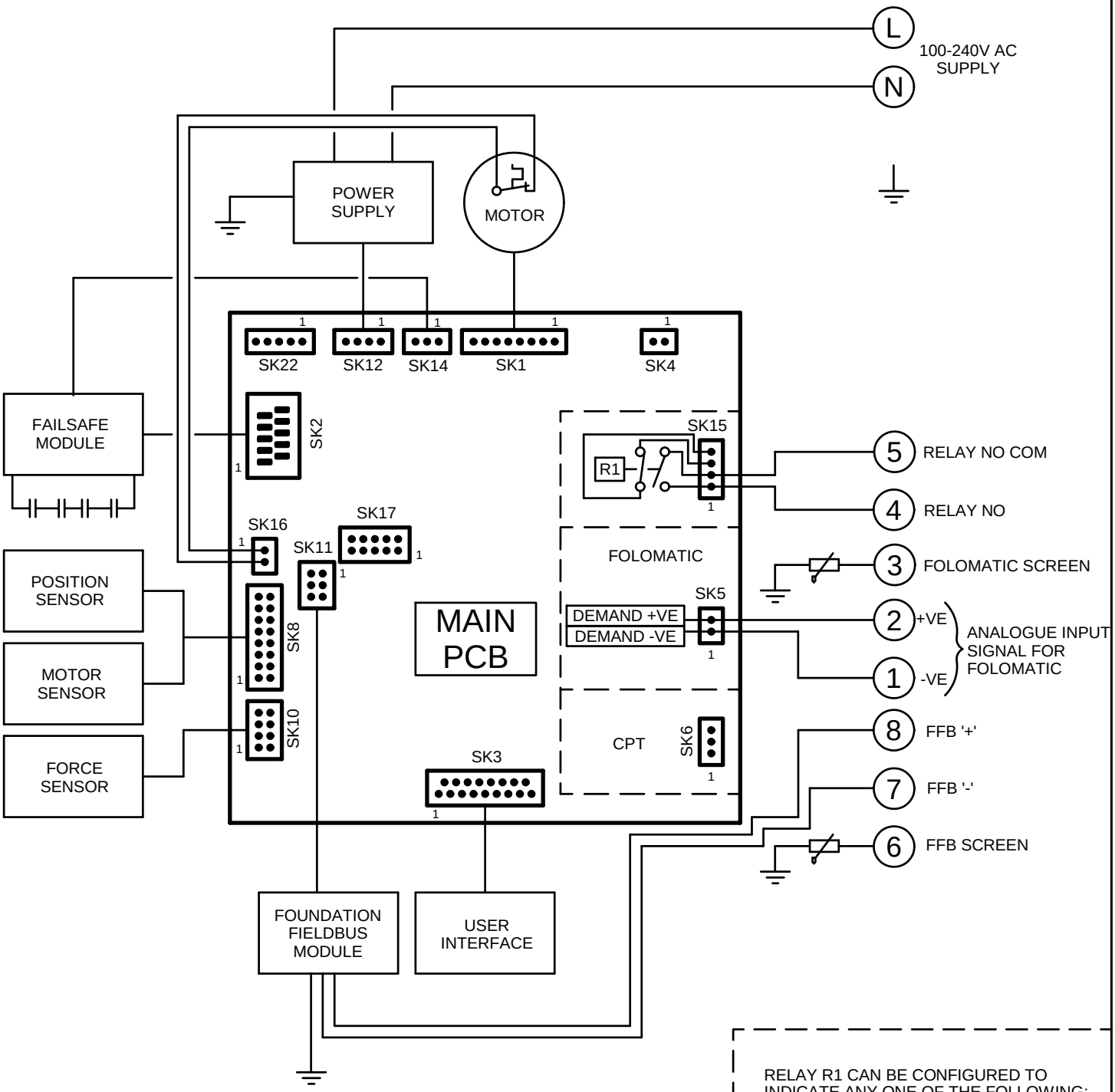

UPS SOCKET FOR
CVL5000 / CVQ6000

SK22

CVL1000/1500/5000/
CVQ2400/6000
RESISTOR PACK
FITTED TO SK4 IF NO
SOLINOID FITTED.

SK4 LOAD RESISTOR.

WHEN MANUAL
OVERRIDE IS FITTED
MOTOR DISABLE
SWITCH FITTED IN
SERIES WITH
THERMOSTAT (SK16)

RELAY R1 CAN BE CONFIGURED TO
INDICATE ANY ONE OF THE FOLLOWING:-

0 DISABLED
1 REMOTE CONTROL AVAILABLE
2 FAULT
3 FULLY OPEN
4 FULLY CLOSED
5 FORCE TRIP OPENING
6 FORCE TRIP CLOSING
7 FORCE TRIP ANY POSITION
8 FAILSAFE OPERATION

Iss	Date	Chkd	Revision Details
2	190312 PMJ	PJW	NOTES ADDED + SK22.
1	021209 PMJ	PMJ	First Issue.

www.rotork.com

ROTORK CONTROLS LTD
BATH, BA1 3JQ
ENGLAND
Tel:01225-733200

ROTORK CONTROLS INC
ROCHESTER
NY 14624, USA
Tel:585-247-2304

CVA, A/C SUPPLY, N/O CONTACT,
FOUNDATION FIELDBUS & FAILSAFE

Drawn by: P.Johns
Date : 021209
Base WD: C20-80
Job No : - -
MI No : - -

Circuit Diagram No: C20-80
Issue No: 2

cva