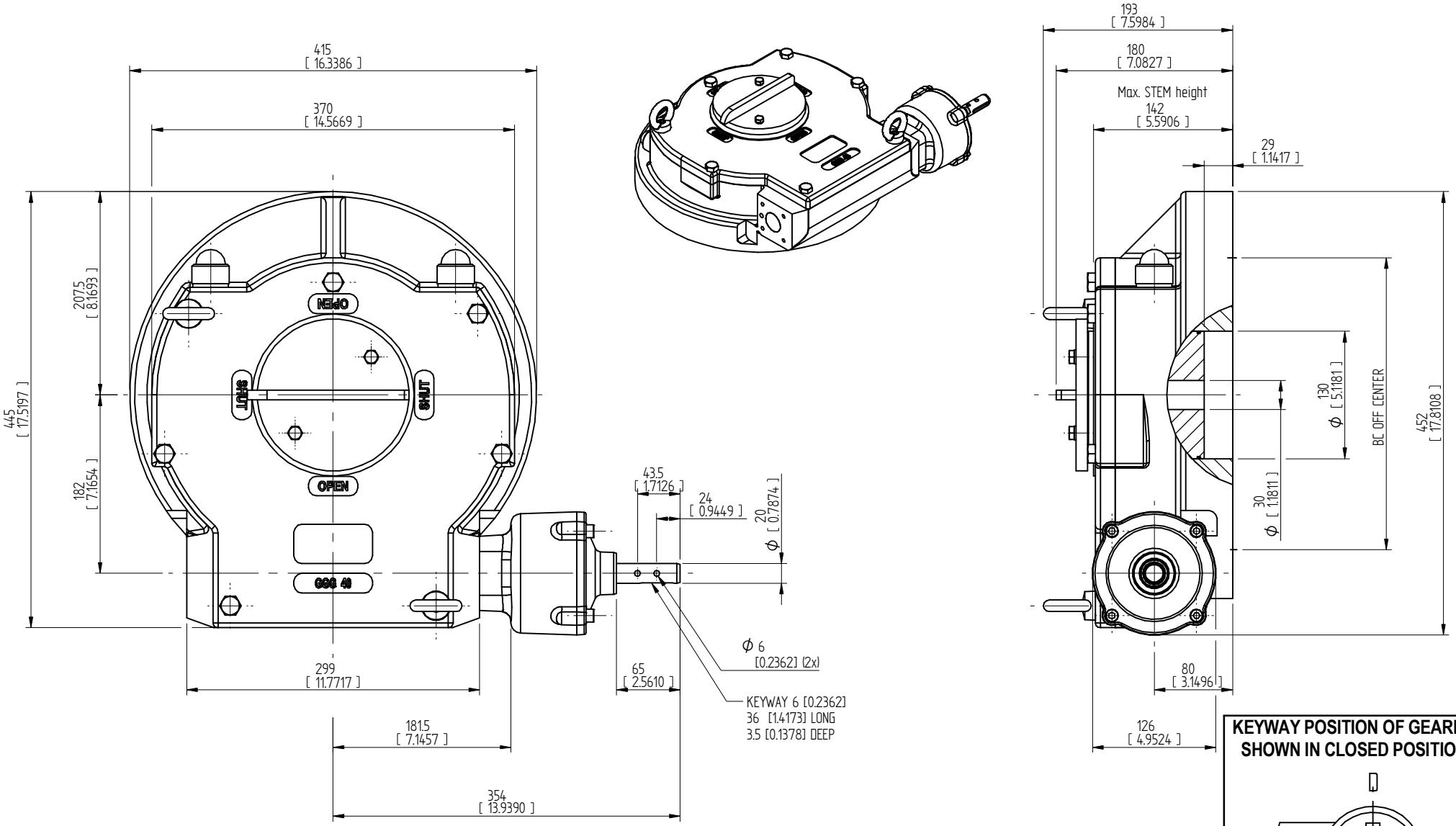

KEYWAY POSITION OF GEARBOX SHOWN IN CLOSED POSITION

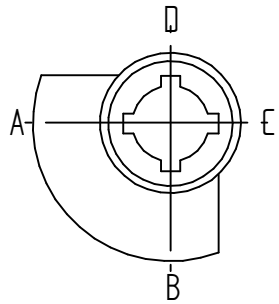

DESCRIPTION:

TRAVEL	: -5° TO 95° adjustable
RATIO	: 468 : 1
TURNS TO CLOSE	: 117
WEIGHT	: 94 kg. (208 lb.) Excl. handwheel

MOUNTING HOLES :

BOLT CIRCLE	:	min. Ø 165 [6.50]
(OFF CENTER)	:	max. Ø 356 [14.02]
acc. ISO 5211	:	F16 - F25 - F30 - F35
Min. bore Quadrant	:	Ø 30 [1.18]
MAX. bore Quadrant	:	⧄ 75 [2.95] or Ø 100 [3.94]

TORQUE :

max. OUTPUT	: 17000 Nm (150620 lbf.in.)
max. INPUT	: 121 Nm (1075 lbf.in.)
MA	: 140.0 ± 15%

DIMENSIONS IN MM[INCH]

ROTORK GEARS

GEARBOX AB6800N-PR6 LB

DRAWN:- Robbin Goosen CHECKED:- Henk Hoff

DWG:- AB6800N-PR6 LB REV: 01