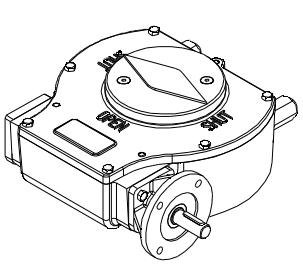


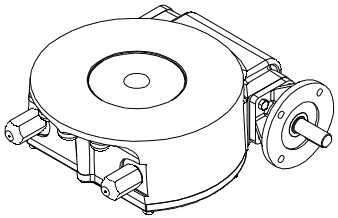

KEYWAY POSITION OF GEARBOX SHOWN IN CLOSED POSITION

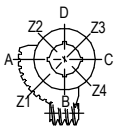


TOP VIEW

| DESCRIPTION | | | | MOUNTING HOLES - BOLT CIRCLE (OFF CENTRES) | | | | BORE; STEM ACCEPTANCE WITH KEYWAY IN ACCORDING WITH STANDARD | | | TORQUE | | |
|---|---|---|---|---|---|---|---|---|---|---|---|---|---|
| RATIO | TURNS TO CLOSE | TRAVEL (1/4 TURN) | WEIGHT | NR of HOLES | MIN ENVELOPE PCD - ØHOLE | MAX ENVELOPE PCD + ØHOLE | ACCORDING TO ISO 5211 / MSS SP-101 | MIN | MAX | STANDARD | OUTPUT | INPUT | MA |
| 58:1 | 14.5 | -5° TO 95° | 44 kg | 4 | Ø165 mm | Ø254 mm | F16 | Ø35 mm | Ø100 mm □75 mm | ISO 773 A | 7000 Nm | 305 Nm | 23 ± 15% |
| | | | | 8 | Ø165 mm | Ø254 mm | F25 | | | | | | |
| | | | 96.8 lb | 4 | Ø6.50 inch | Ø10.0 inch | FA16 | Ø1.38 inch | Ø3.94 inch □2.95 inch | ANSI B17.1 | 61.950 lbf.in | 2699 lbf.in | |
| | | | | 8 | Ø6.50 inch | Ø10.0 inch | FA25 | | | | | | |

AS PART OF CONTINUOUS PRODUCT DEVELOPMENT, ALL DETAILS SUBJECT TO CHANGE WITHOUT PRIOR NOTICE. FOR UP TO DATE DETAILS PLEASE VISIT www.rotork.com

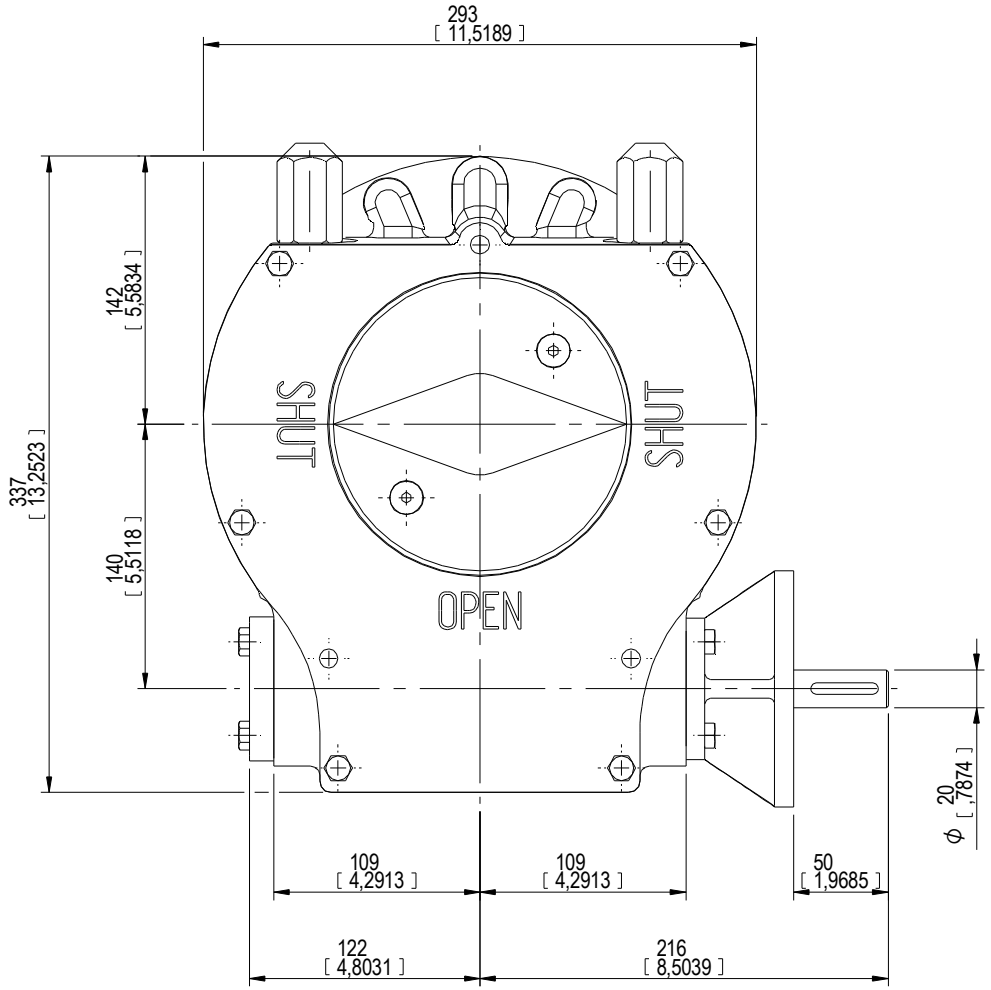


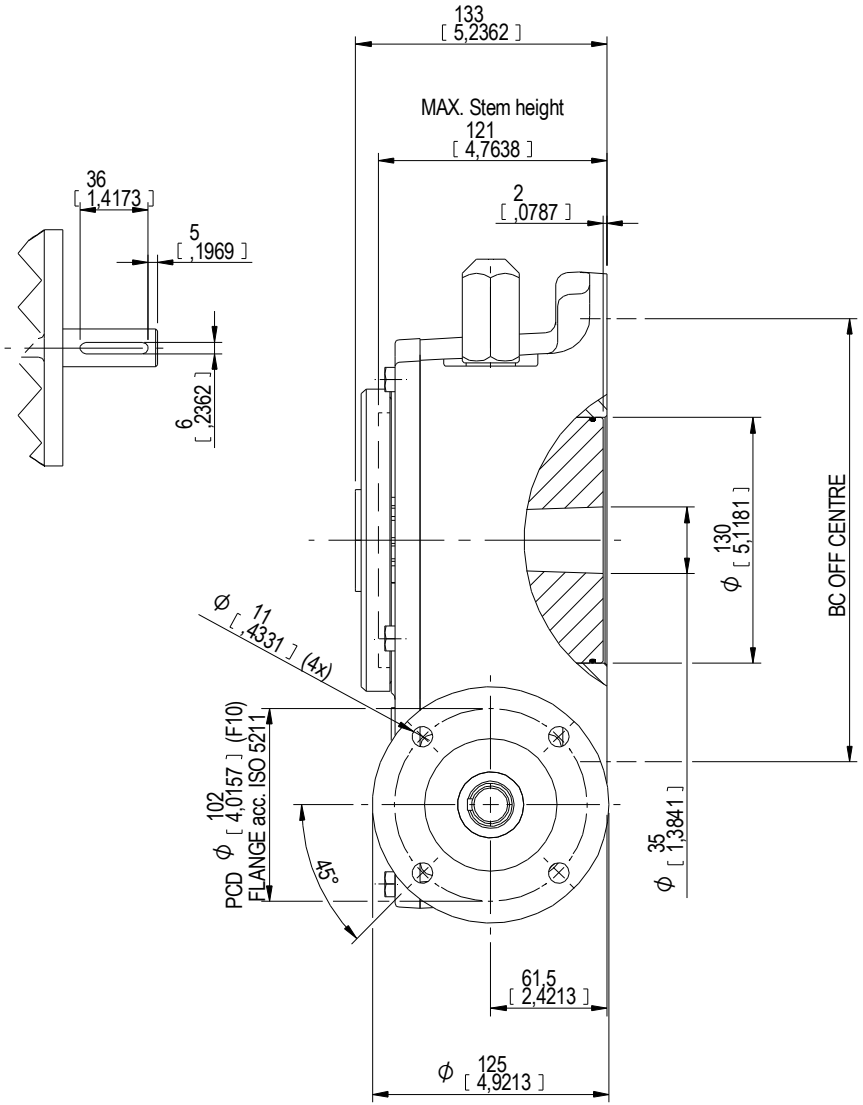


rotork® Gears
LOSSER - THE NETHERLANDS
www.rotork.com

This drawing is confidential and is the property of Rotork Gears and must not be reproduced either wholly or partly. All rights in respect of patents, designs and copyrights are reserved, © 2013

| | | | |
|---|---|---|---|
| Document type | DETAIL DRAWINGS | | Title: GEARBOX E 3000 G |
| | Dimensions in mm [inch] | | |
| | Scale 1:2 | | |
| Created | Robbin.Goosen | 4-4-2013 | Drawing Number: AB-00226-OUT-1 |
| Checked | Henk Hoff | 4-4-2013 | Rev: 00 |
| Approved | Henk Hoff | 4-4-2013 | Sheet 1 of 1 Size A2 |

Rev 01