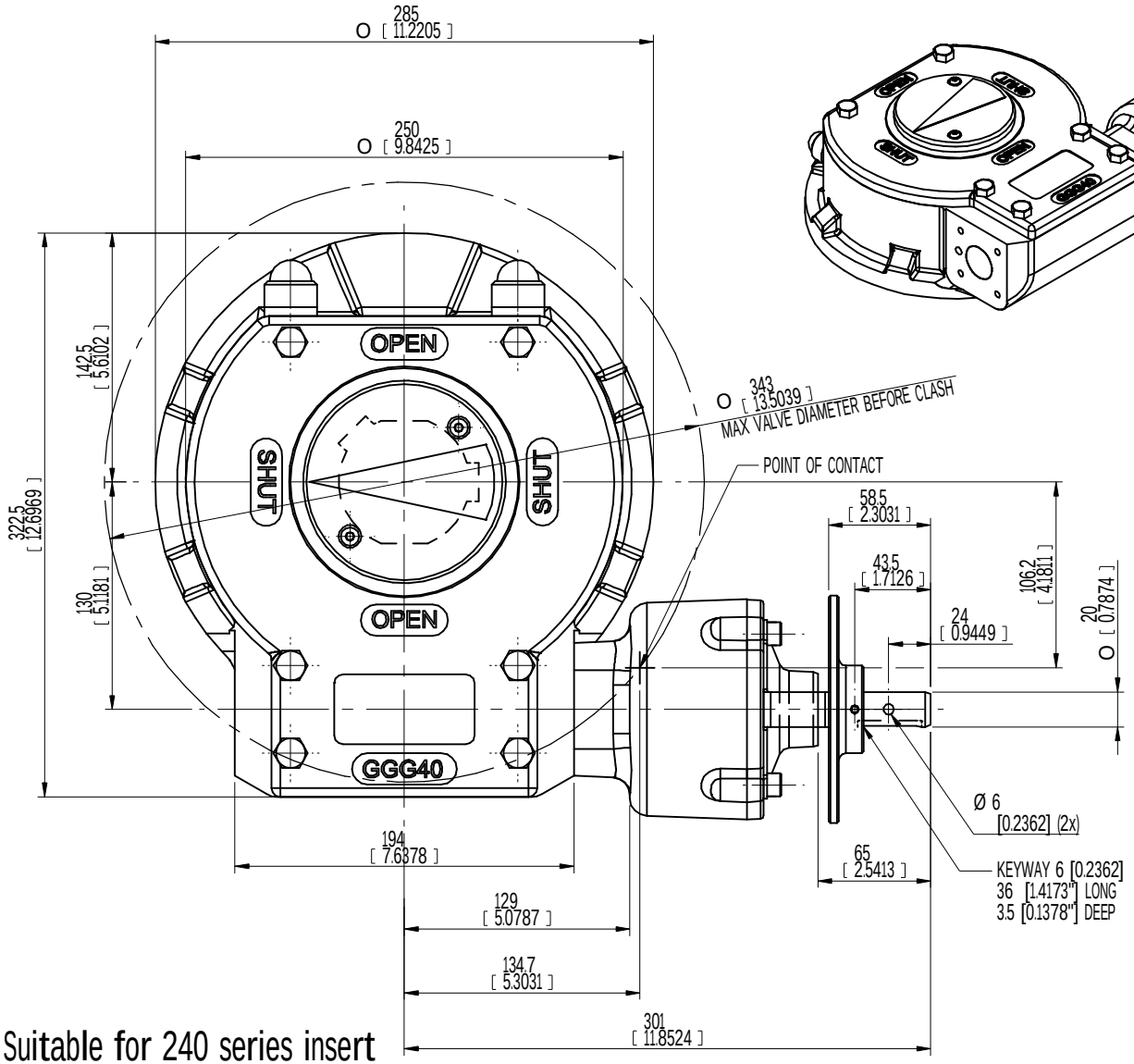

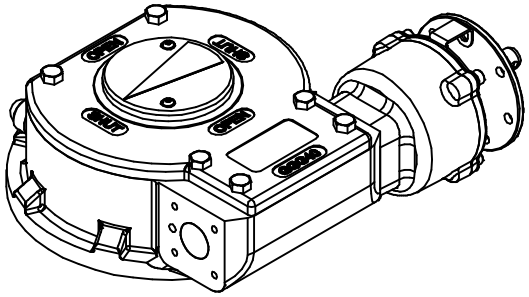

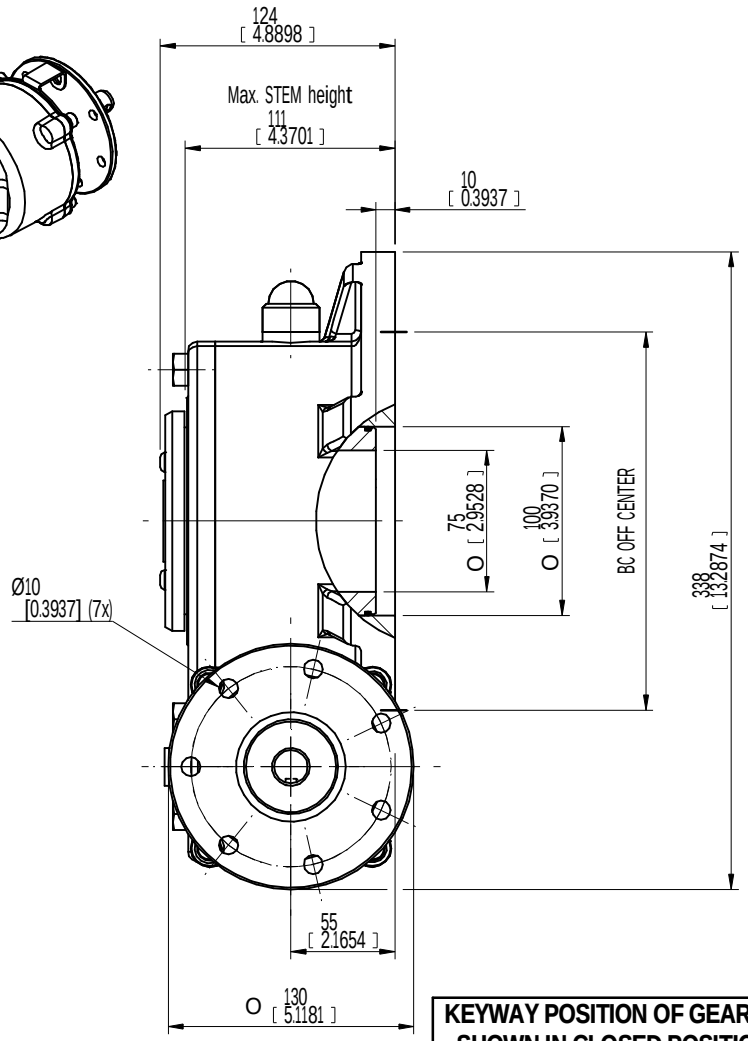

Suitable for 240 series insert

KEYWAY POSITION OF GEARBOX SHOWN IN CLOSED POSITION

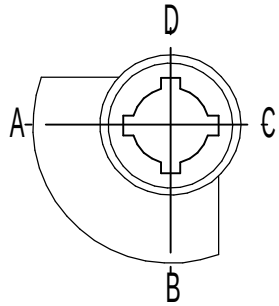

DESCRIPTION:

TRAVEL	: -5° TO 95° adjustable
RATIO	: 217 : 1
TURNS TO CLOSE	: 54.34
WEIGHT	: 39 kg. (85 lb.) Excl. handwheel

MOUNTING HOLES :

BOLT CIRCLE	:	min. Ø 125 [4.92]
(OFF CENTER)	:	max. Ø 254 [10.00]
acc. ISO 5211	:	F12 - F14 - F16 - F25
Min. bore insert	:	Ø 16 [0.63]
MAX. bore insert	:	⌀ 46 [1.81] or Ø 55 [2.05]

TORQUE :

max. OUTPUT	: 7000 Nm (61955 lbf.in.)
max. INPUT	: 106 Nm (939 lbf.in.)
MA	: 66.0 ± 15%

DIMENSIONS IN MM[INCH]

ROTORK GEARS

GEARBOX AB1950N-PR4 + PADLOCK

DRAWN:- Robbin Goosen CHECKED:- Henk Hoff

DWG:- AB1950N-PR4 + Padlock insert REV: 02