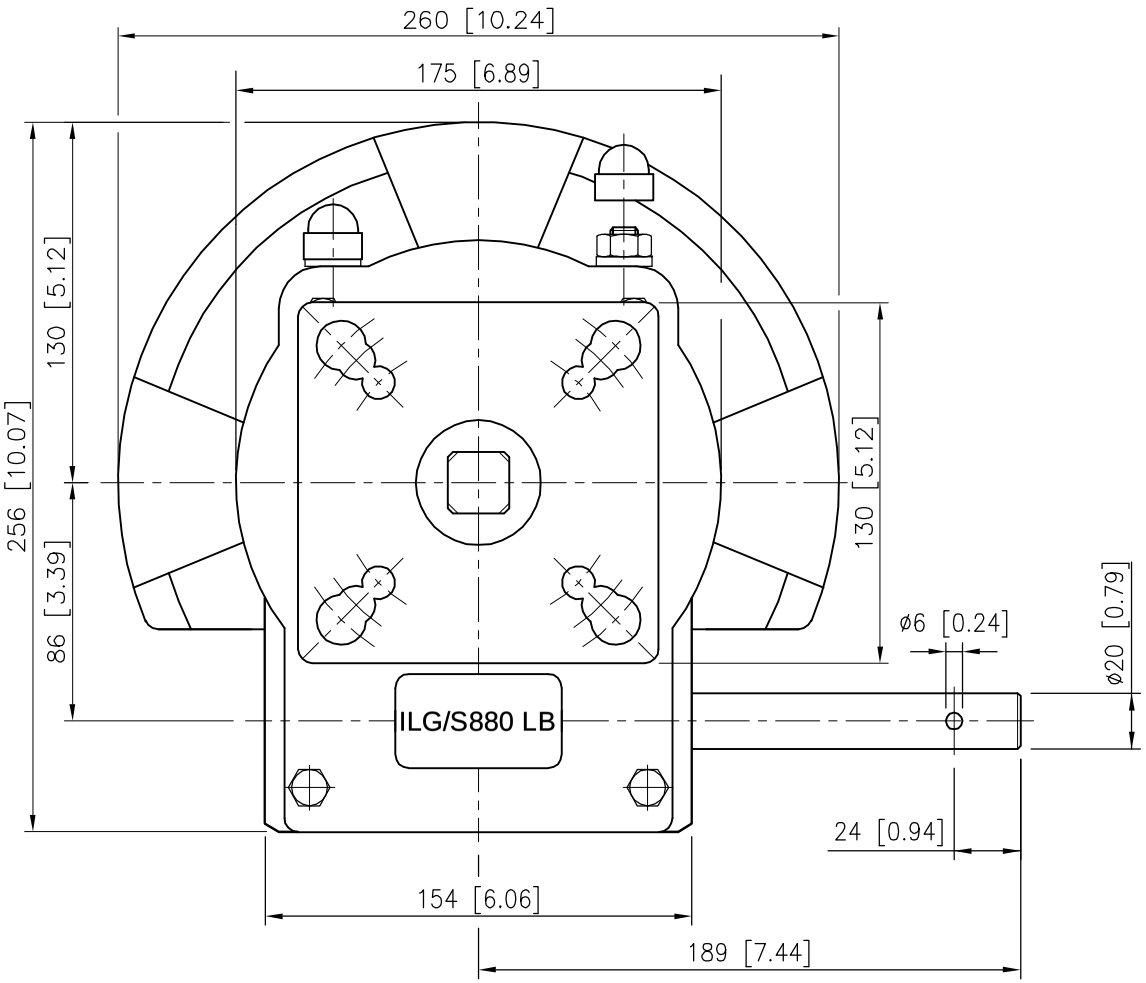

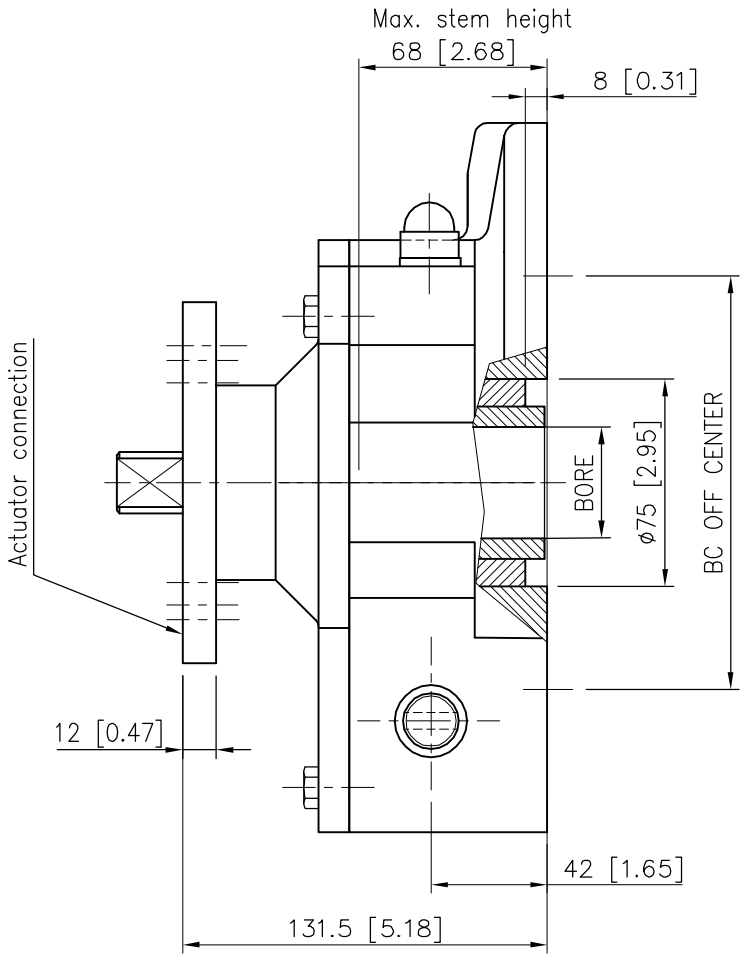

DESCRIPTION

TRAVEL : 90° ±5° AT BOTH ENDS.
RATIO : 38 : 1
TURNS TO CLOSE : **9,5**
WEIGHT : 17 kg.(37.5 lb.) excl.handwheel

MOUNTING DIMENSIONS

Valve connection : F10/F12/F14/F16
MAX. bore : ø32 [1.26] or ø40 [1.57]
Actuator connection : F10/F12/F14
MAX. shaft : ø36 [1.42] or ø50 [1.97]

TORQUE

max.OUTPUT : 1620 Nm (14350 lbf.in.)
max.INPUT : 123 Nm (1089 lbf.in.)
M.A. : 13.2 ±15%

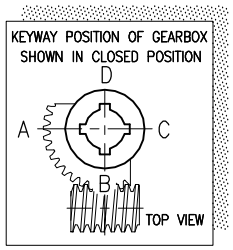

Dimensions in MM [inch]

rotork gears
Nijverheidstraat 25
7581 PV Losser
The Netherlands

GEARBOX ILG / S 880 LB

THIS DOCUMENT IS PROPERTY OF ROTORK GEARS, NEITHER THIS OR ITS CONTENT MAY BE COPIED OR USED IN ANY OTHER WAY DETRIMETAL TO THE INTEREST OF ROTORK GEARS, ACCEPTANCE OF THIS DOCUMENT SHALL CONSTITUTE ACKNOWLEDGEMENT OF THE FOREGOING CONDITIONS

Drawn : J.t.P. Date : 09-06-10
Dwg Nr.: D32NLB-001 Rev.: 00

Contents Subject to change without notice.

PDF created with pdfFactory Pro trial version www.pdffactory.com