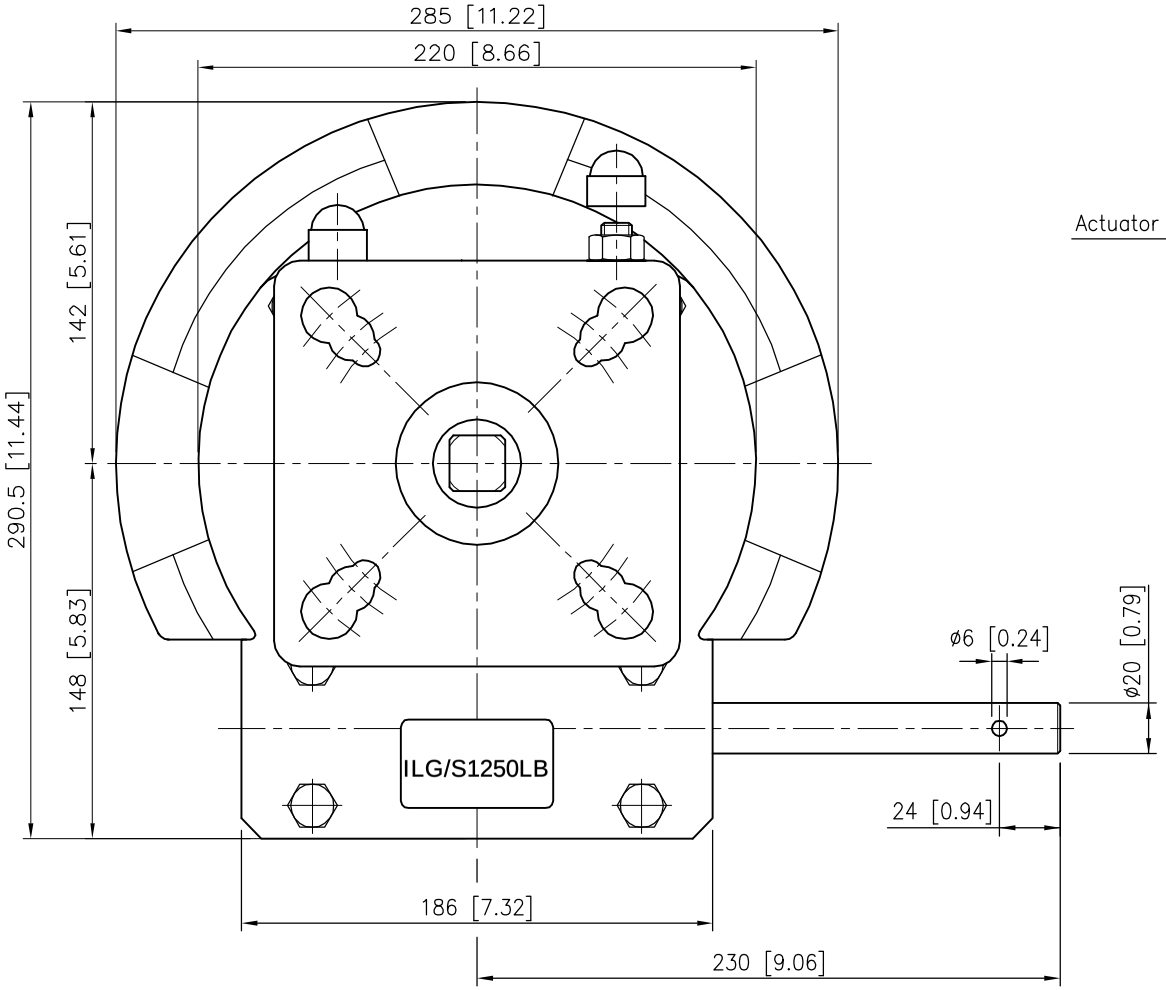

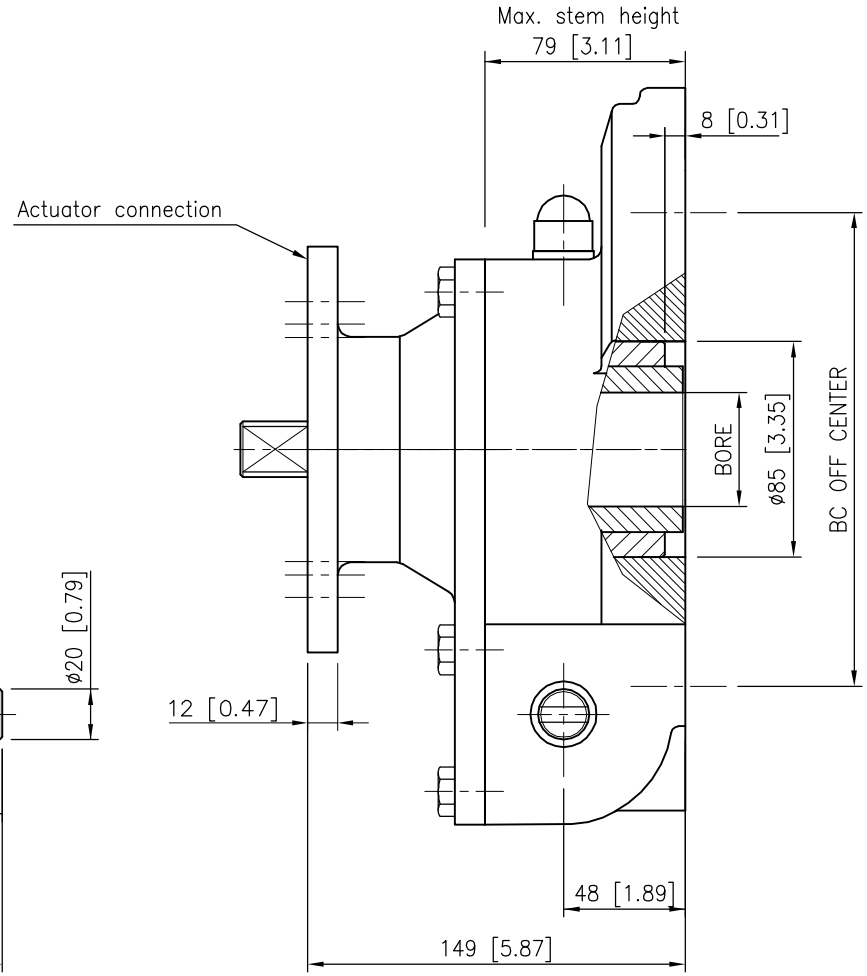

DESCRIPTION

TRAVEL : 90° ±5° AT BOTH ENDS.
RATIO : 55 : 1
TURNS TO CLOSE : 13,75
WEIGHT : 27.5 kg.(60.6lb.) excl.handwheel

MOUNTING DIMENSIONS

Valve connection:F10/F12/F14/F16/F25
MAX. bore : ⌀36 [1.42] or ø45 [1.77]
Actuator connection :F12/F14/F16
MAX. shaft : ⌀46 [1.81] or ø60 [2.36]

TORQUE

max.OUTPUT : 2640 Nm (23380 lbf.in.)
max.INPUT : 139 Nm (1230 lbf.in.)
M.A. : 19 ±15%

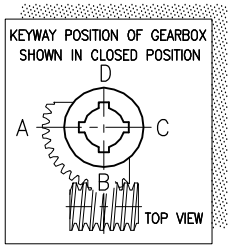

Dimensions in MM [inch]

rotork gears
Nijverheidstraat 25
7581 PV Losser
The Netherlands

GEARBOX ILG / S 1250 LB

THIS DOCUMENT IS PROPERTY OF ROTORK GEARS, NEITHER THIS OR ITS CONTENT MAY BE COPIED OR USED IN ANY OTHER WAY DETRIMETAL TO THE INTEREST OF ROTORK GEARS, ACCEPTANCE OF THIS DOCUMENT SHALL CONSTITUTE ACKNOWLEDGEMENT OF THE FOREGOING CONDITIONS

Drawn : J.t.P. Date : 09-06-10
Dwg Nr.: D33NLB-001 Rev.: 00

Contents Subject to change without notice.

PDF created with pdfFactory Pro trial version www.pdffactory.com