INPUT FLANGE DETAILS							MOUNTING HOLES - BOLT CIRCLE (OFF CENTRES)								
INPUT FLANGE	FLANGE O/DIA. + THICKNESS	SHAFT DIA.	RECESS DIA.	RECESS DEPTH	HOLE DETAILS (45° OFF CENTRES)	KEY DETAILS	ISO 5211 / MSS SP-101 MOUNTING OPTION	HOLE DETAILS (22.5° OFF CENTRES)	STANDARD	MIN BORE	SQ KEY MAX BORE	SQ KEY SIZE	RECT. KEY MAX BORE	RECT. KEY SIZE	SQ BORE MAX
ISO F25	Ø300 x 20 (Ø11.81" x 0.787")	Ø50.00-0.05 (Ø1.969"-0.002")	Ø200.10+0.10 (Ø7.878"+0.004")	5 (0.20")	8 x Ø16.5 ON Ø254.0 P.C. (8 x Ø0.65" ON Ø10.00" P.C.)	14x9x55 (0.55"x0.35"x2.17")	ISO F35*	8 x M30 x 36 (1.42") DEEP ON Ø356.0 (Ø14.02") P.C.	BS4235	-	-	-	178	45 x 25	□ 132.1 (5.20")
									BS46	-	-	-	6.75"	1.75" x 1.25"	
FA25			Ø152.30+0.17 (Ø5.996"+0.007")				FA35*	8 x 1" UNC x 36 (1.42") DEEP ON Ø355.6 (Ø14.00") P.C.	ANSI B17.1	-	6.50"	1.1/2" SQ.	6.50"	1.5" x 1"	
									DIN 6885	-	-	-	178	45 x 25	

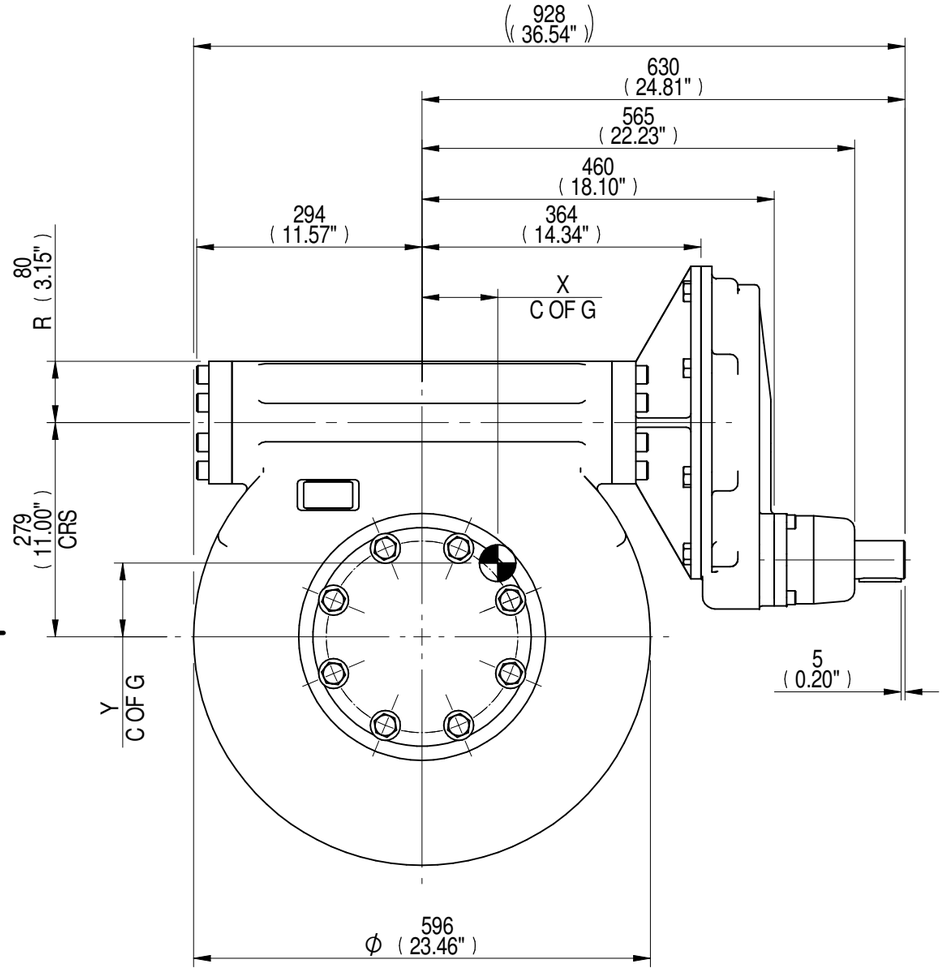

VIEW SHOWING MANUAL OPERATED UNIT

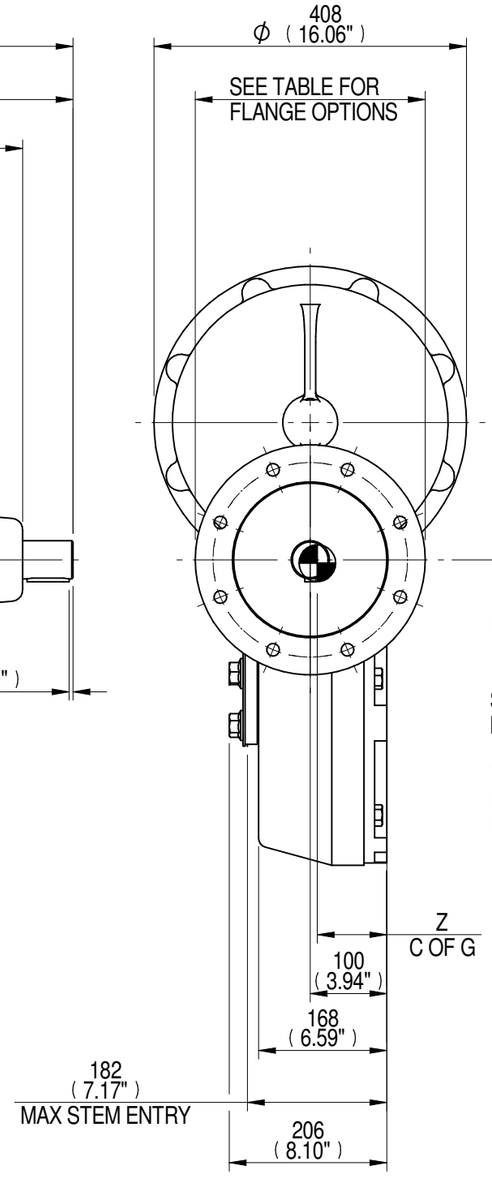

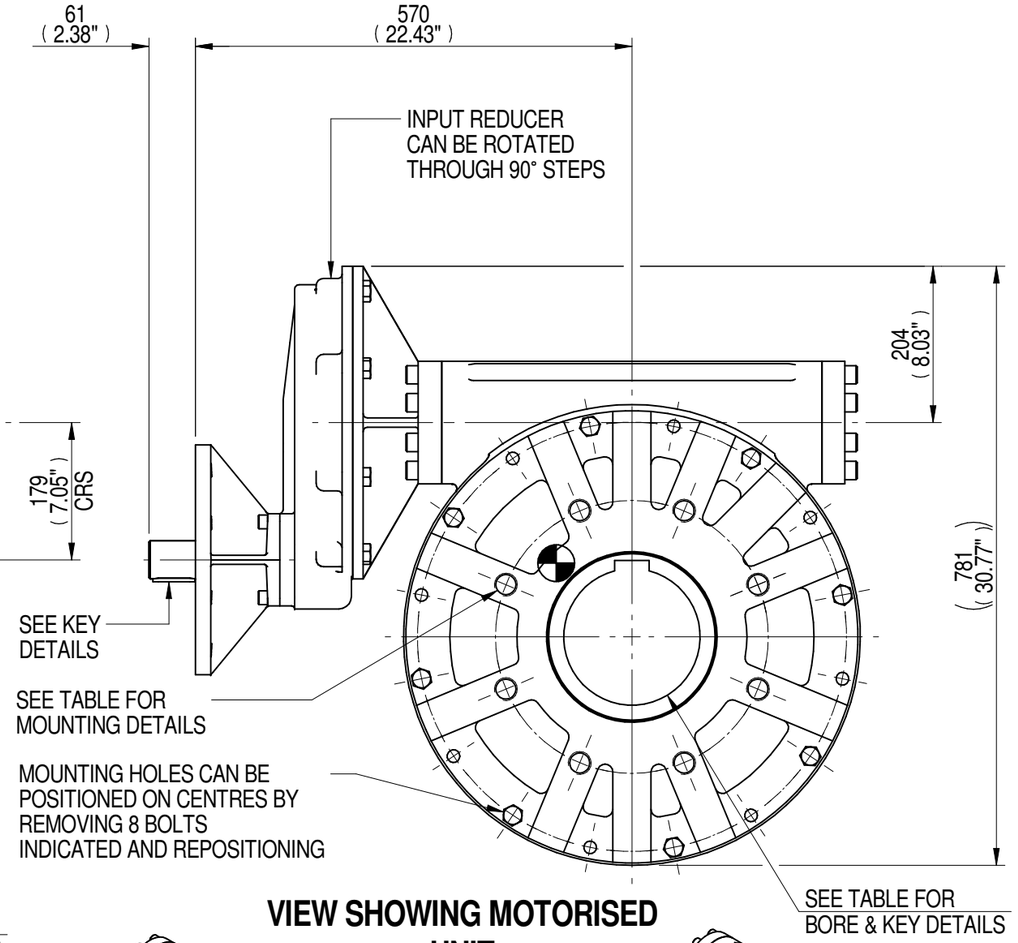

VIEW SHOWING MOTORISED UNIT

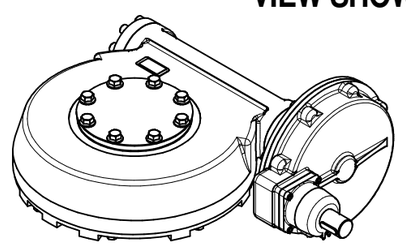

MANUAL
1:15

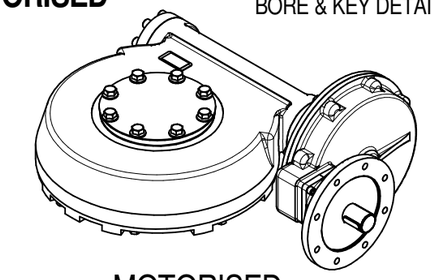

MOTORISED
1:15

PLAN VIEW OF GEARBOX IN CLOSED POSITION SHOWING STANDARD KEYWAY POSITIONS. ALTERNATIVES AVAILABLE ON REQUEST

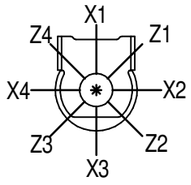

NOTES:
1. * THREAD DEPTH DOES NOT MATCH ISO STANDARD
2. CENTRE OF GRAVITY POSITION IS INDICATIVE FOR STANDARD BUILD WHEN IN POSITION SHOWN

720	285	310	39318	138	102	99	91
540	214	308	39318	184	100	98	91
360	142	308	39318	277	100	98	91
240	95	308	39318	414	100	97	91
180	71	307	39318	554	99	96	91
RATIO	M.A.	WEIGHT (Kg)	MAX OUTPUT (Nm)	MAX INPUT (Nm)	X	Y	Z
DESCRIPTION			TORQUE		CENTRE OF GRAVITY		

AS PART OF CONTINUOUS PRODUCT DEVELOPMENT, ALL DETAILS SUBJECT TO CHANGE WITHOUT PRIOR NOTICE. FOR UP TO DATE DETAILS PLEASE VISIT www.rotork.com

rotork® Gears
LEEDS - UK
www.rotork.com

This drawing is confidential and is the property of Rotork Gears and must not be reproduced either wholly or partly. All rights in respect of patents, designs and copyrights are reserved. ©2015

Document Type **PUBLICITY**
Dimensions in mm

Title
MTW9 MULTI-TURN GEARBOX, 180/240/360/540/720:1, MANUAL F25/FA25 INPUT, F35/FA35 OUTPUT

Drawing Number
PUB-MTW9IR2-F25-F35

Iss. 01

Sheet 1 of 1 Size A3

Rev 05