CIRCUIT DRAWN WITH
POWER SUPPLY OFF

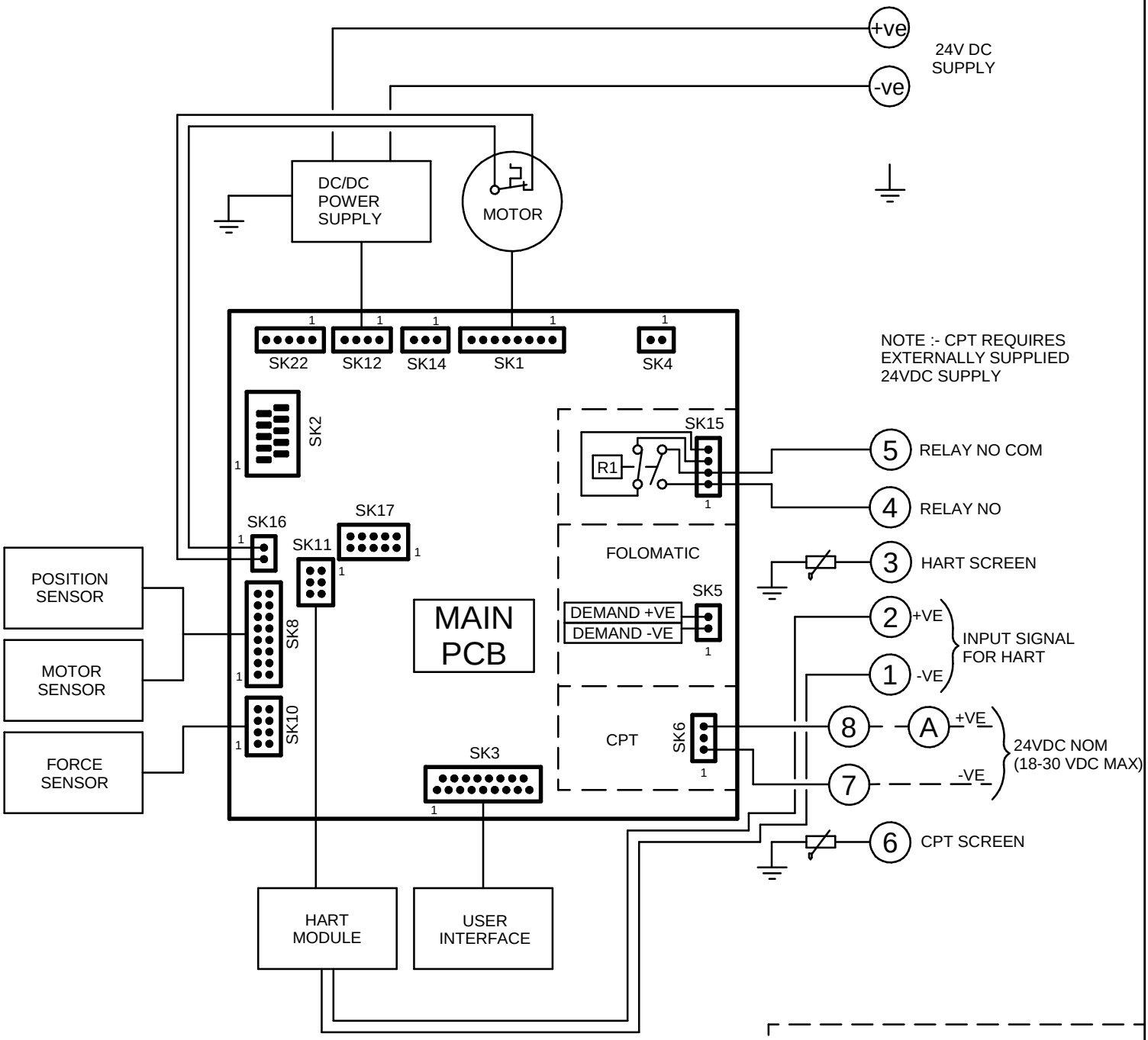


NOTE :- CPT REQUIRES EXTERNALLY SUPPLIED 24VDC SUPPLY

UPS SOCKET FOR CVL5000 / CVQ6000

SK22

CVL1000/1500/5000/ CVQ2400/6000 RESISTOR PACK FITTED TO SK4 IF NO SOLINOID FITTED.

SK4 LOAD RESISTOR.

WHEN MANUAL OVERRIDE IS FITTED MOTOR DISABLE SWITCH FITTED IN SERIES WITH THERMOSTAT (SK16)

RELAY R1 CAN BE CONFIGURED TO INDICATE ANY ONE OF THE FOLLOWING:-

0 DISABLED
1 REMOTE CONTROL AVAILABLE
2 FAULT
3 FULLY OPEN
4 FULLY CLOSED
5 FORCE TRIP OPENING
6 FORCE TRIP CLOSING
7 FORCE TRIP ANY POSITION
8 FAILSAFE OPERATION

| Iss | Date | Chkd | Revision Details |
|---|---|---|---|
| 1 | 011216 | JC1 | First Issue. |

www.rotork.com

ROTORK CONTROLS LTD
BATH, BA1 3JQ
ENGLAND
Tel:01225-733200

ROTORK CONTROLS INC
ROCHESTER
NY 14624, USA
Tel:585-247-2304

CVA, D/C SUPPLY, N/O CONTACT & HART

Drawn by: PJW
Date : 070311
Base WD: C10-10
Job No : - -
MI No : - -

Circuit Diagram No: C10-10
Issue No: 1

cva