INPUT FLANGE DETAILS							MOUNTING HOLES - BOLT CIRCLE (OFF CENTRES)								
INPUT FLANGE	FLANGE O/DIA. + THICKNESS	SHAFT DIA.	RECESS DIA.	RECESS DEPTH	HOLE DETAILS (45° OFF CENTRES)	KEY DETAILS	ISO 5211 / MSS SP-101 MOUNTING OPTION	HOLE DETAILS (22.5° OFF CENTRES)	STANDARD	MIN BORE	SQ KEY MAX BORE	SQ KEY SIZE	RECT. KEY MAX BORE	RECT. KEY SIZE	SQ BORE MAX
ISO F14	Ø175 x 15 (Ø6.89" x 0.59")	Ø30.00-0.05 (Ø1.181"-0.002")	Ø100.05+0.15 (Ø3.939"+0.006")	5 (0.20")	4 x Ø16.5 ON Ø140.0 P.C. (4 x Ø0.65" ON Ø5.51" P.C.)	8x7x55 (0.31"x0.28"x2.17")	ISO F35*	8 x M30 x 36 (1.42") DEEP ON Ø356.0 (Ø14.02") P.C.	BS4235	-	-	-	178	45 x 25	□ 132.1 (5.20")
									BS46	-	-	-	6.75"	1.75" x 1.25"	
FA14			Ø95.25+0.15 (Ø3.750"+0.006")				FA35*	8 x 1" UNC x 36 (1.42") DEEP ON Ø355.6 (Ø14.00") P.C.	ANSI B17.1	-	6.50"	1.1/2" SQ.	6.50"	1.5" x 1"	
									DIN 6885	-	-	-	178	45 x 25	

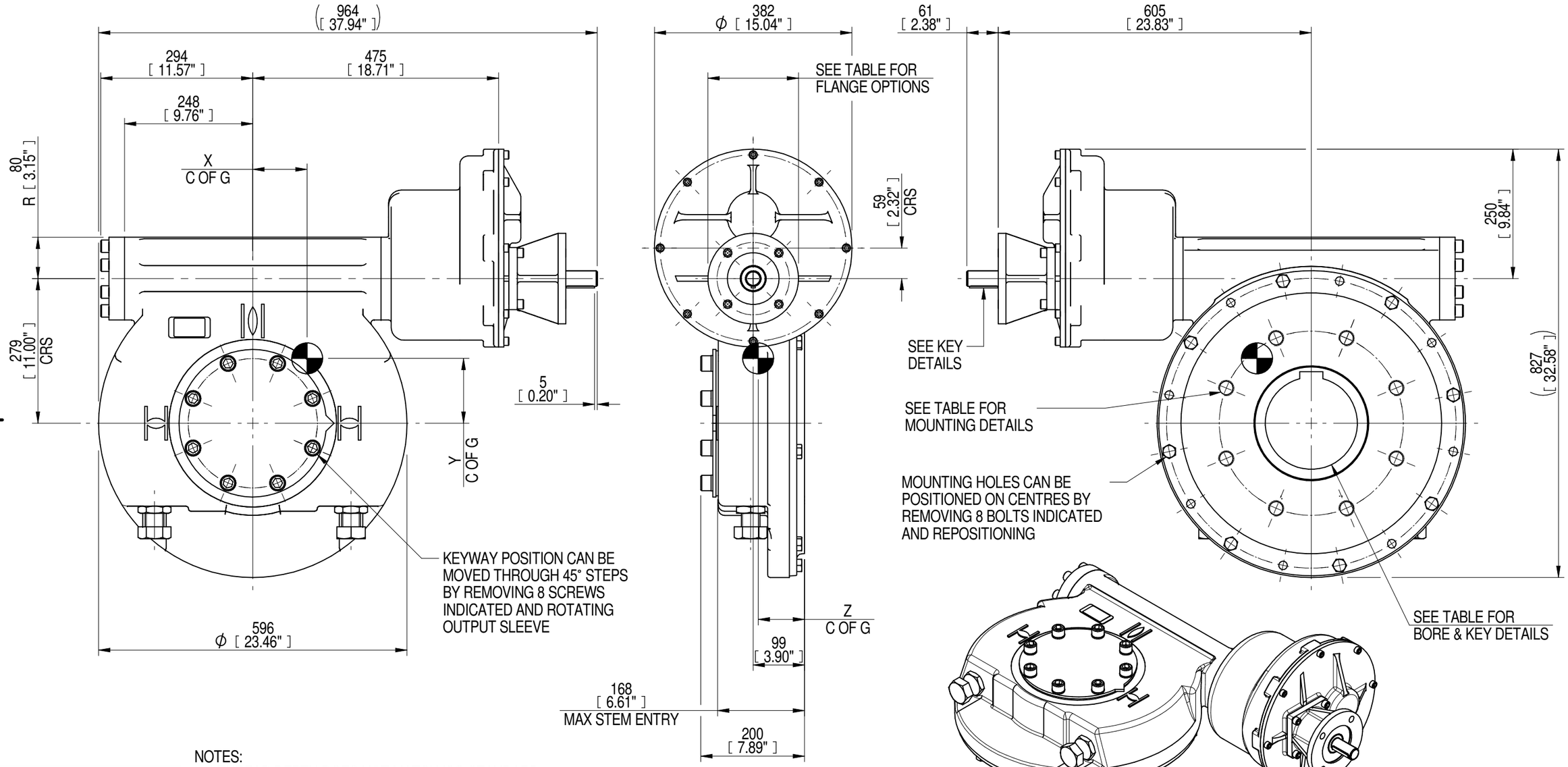

NOTES:
1. * THREAD DEPTH DOES NOT MATCH ISO STANDARD
2. CENTRE OF GRAVITY POSITION IS INDICATIVE FOR STANDARD BUILD WHEN IN POSITION SHOWN

PLAN VIEW OF GEARBOX IN CLOSED POSITION SHOWING STANDARD KEYWAY POSITIONS. ALTERNATIVES AVAILABLE ON REQUEST

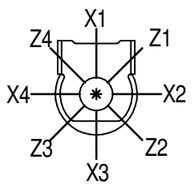

RATIO	TURNS TO CLOSE	M.A. ± 10%	WEIGHT (Kg)	MAX OUTPUT (Nm)	MAX INPUT (Nm)	X	Y	Z
3000	750	1188	291	52171	44	105	125	89
2520	630	998	296	52171	52	111	130	90
2160	540	855	290	52171	61	104	124	89
1440	360	570	292	52171	92	105	126	89
1080	270	428	290	52171	122	103	125	89
960	240	380	292	52171	137	105	125	89
DESCRIPTION				TORQUE		CENTRE OF GRAVITY		

AS PART OF CONTINUOUS PRODUCT DEVELOPMENT, ALL DETAILS SUBJECT TO CHANGE WITHOUT PRIOR NOTICE. FOR UP TO DATE DETAILS PLEASE VISIT www.rotork.com

rotork® Gears
LEEDS - UK
www.rotork.com

This drawing is confidential and is the property of Rotork Gears and must not be reproduced either wholly or partly. All rights in respect of patents, designs and copyrights are reserved. ©2016

Document Type **PUBLICITY**
Dimensions in mm

Title
IW/MOW9 QUARTER TURN GEARBOX, 960/1080/1440/2160/2520/3000 : 1, F14/ FA14 INPUT : F35/ FA35 OUTPUT

Drawing Number
PUB-IW9FBIR3-F14-F35
Iss. 01

Sheet **1** of **1** Size A3

Rev 05