CIRCUIT IS DRAWN FOR A VALVE IN THE FULLY CLOSED POSITION

Circuit Diagram No - Issue No

6P06Q00A - 01

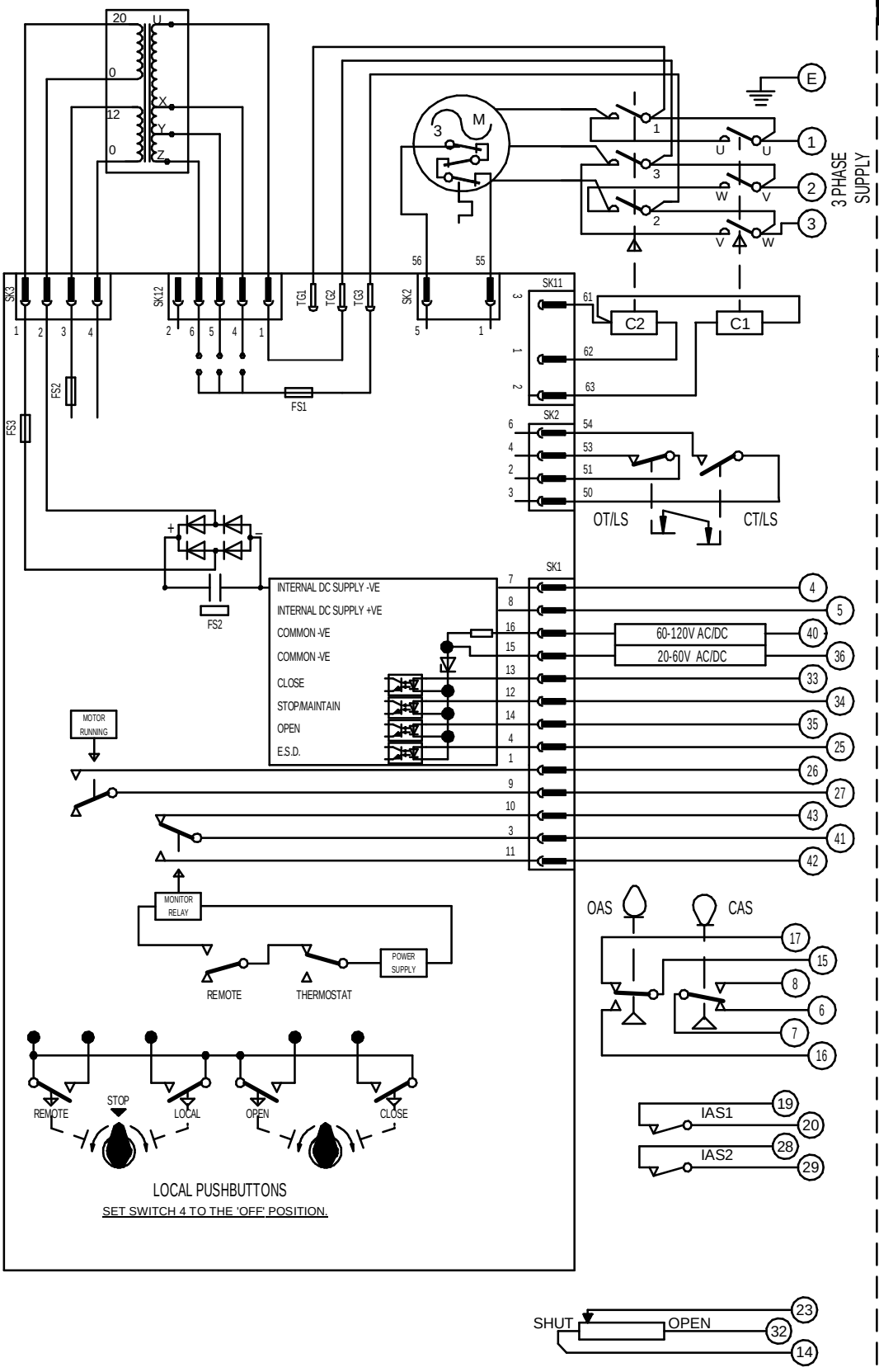

TRANSFORMER TAPPING OPTIONS

TAP	NOM50/60HZ	50HZ	60HZ
X	380/440	342-418	396-484
Y	400/460	360-440	414-506
Z	415/480	373-457	432-528

JUMPER AT LK2 FOR TAPPING X

JUMPER AT LK3 FOR TAPPING Y

JUMPER AT LK4 FOR TAPPING Z

OT/LS - OPEN TORQUE/LIMIT SWITCH.

CT/LS - CLOSE TORQUE/LIMIT SWITCH.

OAS - OPEN AUXILIARY SWITCH.

CAS - CLOSE AUXILIARY SWITCH.

WIRES ARE IDENTIFIED AT EACH END BY TERMINAL NUMBER OR NUMBER SHOWN.

FS1 - 100 mA

FS2 - 1 A

FS3 - 250 mA

TERMINALS 4 & 5 FUSED INTERNALLY AT 160mA

E.S.D. CONTROL SIGNAL VOLTAGE MUST BE EQUAL TO OR GREATER THAN ALL OTHER CONTROL SIGNAL VOLTAGES.

Iss	Date	Chkd	Revision Details
01	120218	JS	FIRST ISSUE

www.rotork.com

ROTORK CONTROLS (INDIA) PRIVATE LTD
28B, AMBATTUR INDUSTRIAL ESTATE (NORTH),
AMBATTUR, CHENNAI - 600 098 INDIA.
Tel:044-39555600

BASIC Q-PAK. + 2 INTERMEDIATE SW. AND POTENTIOMETER.

Drawn by: JS
Date : 120218
Base WD:
Job No : --
MI No : .

Circuit Diagram No: 6P06Q00A

Issue No: 1